Dart Aerospace Ltd.

Date: Thursday, 5/3/2007 11:24:35 AM
User: Kim Johnston

Process Sheet

Customer	: CU-DAR001 Dart Helicopters Services	Drawing Name	: 350/355 AS X-TUBE FWD ~~UNDER REVIEW~~
Job Number	: 32155		
Estimate Number	: 12485		
P.O. Number	:	Part Number	: D350748101
This Issue	: 5/3/2007 S.O. No. :	Drawing Numb	: ~~UNDER REVIEW~~ OK Approved
Prsht Rev.	: NC	Project Numb	: N/A
First Issue	: / / Type : LANDING GEAR	Drawing Revisi	: N/A
Previous Run	: 32154	Material	:
Written By	:	Due Date	: 6/10/2007 Qty: 1 Um: Each
Checked & Approved By	: 07.05.03		

Comment : Est Rev: A New Issue 06-07-[illegible] [illegible]
Est Rev: B Update qty of MS21[illegible] [illegible]6-09-12 KJ

Additional Product

Job Number:

Seq. #:	Machine Or Operation:	Description :
1.0	DC	DOCUMENT CONTROL

KS 07.05.31

Comment: Photocopy bluefile & type labels per PPPD350-748-101 CHG001

2.0	32155A	X-TUBE AS 350/355 HI FWD UNDER REWIEW

Comment: Sub-Component X-TUBE AS 350/355 HI FWD
D350-748-141 B 32155A 7/6/20 SO

3.0	PACKAGING 1	PACKAGING RESOURCE #1

Comment: PACKAGING RESOURCE #1
Pick Packing Kit

4.0	D35001	350 SADDLE

Comment: Qty.: 4.0000 Each(s)/Unit Total : 4.0000 Each(s)
350 SADDLE
Batch: M31934 SG

5.0	D35011	BUSHING

Comment: Qty.: 16.0000 Each(s)/Unit Total : 16.0000 Each(s)
BUSHING
Batch: M31935 7-11-20 SO

Dart Aerospace Ltd

W/O:		WORK ORDER CHANGES					
DATE	STEP	PROCEDURE CHANGE	By	Date	Qty	Approval Chief Eng / Prod Mgr	Approval QC Inspector

Part No: _____ **PAR #:** _____ **Fault Category:** _____ **NCR:** Yes No **DQA:** _____ **Date:** _____

QA: N/C Closed: _____ **Date:** _____

NCR:		WORK ORDER NON-CONFORMANCE (NCR)						
DATE	STEP	Description of NC Section A	Corrective Action Section B			Verification Section C	Approval Chief Eng	Approval QC Inspector
			Initial Chief Eng	Action Description Chief Eng	Sign & Date			

NOTE: Date & initial all entries

Date: Thursday, 5/3/2007 11:24:35 AM
User: Kim Johnston

Process Sheet

Customer: CU-DAR001 Dart Helicopters Services **Drawing Name:** 350/355 AS X-TUBE FWD UNDER REVIEW

Job Number: 32155 **Part Number:** D350748101

Job Number:

Seq. #:	Machine Or Operation:	Description :
6.0	AN46A	Bolt
Comment:	Qty.: 16.0000 Each(s)/Unit Total : 16.0000 Each(s) Bolt Batch: M104322 SP	
7.0	AN441A	bolt
Comment:	Qty.: 8.0000 Each(s)/Unit Total : 8.0000 Each(s) bolt Batch: M105940 SP	
8.0	AN532A	Bolt
Comment:	Qty.: 4.0000 Each(s)/Unit Total : 4.0000 Each(s) Bolt Batch: M1019361 SP	
9.0	AN960JD416	Washer
Comment:	Qty.: 32.0000 Each(s)/Unit Total : 32.0000 Each(s) Washer Batch: M105426 SP	
10.0	AN960JD516	Washer
Comment:	Qty.: 8.0000 Each(s)/Unit Total : 8.0000 Each(s) Washer Batch: M104156 SP	
11.0	MS21042L4	Nut
Comment:	Qty.: 24.0000 Each(s)/Unit Total : 24.0000 Each(s) Nut Batch: M105054 SP	
12.0	MS21042L5	Nut
Comment:	Qty.: 4.0000 Each(s)/Unit Total : 4.0000 Each(s) Nut Batch: M105430 3-11-20 SP	

Form: mprocess

Dart Aerospace Ltd

W/O:		WORK ORDER CHANGES					
DATE	STEP	PROCEDURE CHANGE	By	Date	Qty	Approval Chief Eng / Prod Mgr	Approval QC Inspector

Part No: _____ **PAR #:** _____ **Fault Category:** _____ **NCR:** Yes No **DQA:** _____ **Date:** _____

QA: N/C Closed: _____ **Date:** _____

NCR:		WORK ORDER NON-CONFORMANCE (NCR)						
DATE	STEP	Description of NC Section A	Corrective Action Section B			Verification Section C	Approval Chief Eng	Approval QC Inspector
			Initial Chief Eng	Action Description Chief Eng	Sign & Date			

NOTE: Date & initial all entries

H:\fFORMS\Quality Assurance\approved QA\NCRWO RevD

Date: Thursday, 5/3/2007 11:24:36 AM
User: Kim Johnston

Process Sheet

Customer: CU-DAR001 Dart Helicopters Services **Drawing Name:** 350/355 AS X-TUBE FWD UNDER REVIEW

Job Number: 32155 **Part Number:** D350748101

Job Number:

Seq. #:	Machine Or Operation:	Description :
13.0	QC4	INSPECT 100% KITS FOR COMPLETENESS
	Comment: INSPECT 100% KITS FOR COMPLETENESS	
14.0	PACKAGING 1	PACKAGING RESOURCE #1
	Comment: PACKAGING RESOURCE #1 Identify and pack for shipping as per PPP D350-748-101 Location: PPP Rev: B 7/11/20 SD (1x)	
15.0	QC21	FINAL INSPECTION/W/O RELEASE
	Comment: FINAL INSPECTION/W/O RELEASE	

Job Completion

Dart Aerospace Ltd

W/O:		WORK ORDER CHANGES					
DATE	STEP	PROCEDURE CHANGE	By	Date	Qty	Approval Chief Eng / Prod Mgr	Approval QC Inspector

Part No: _____ **PAR #:** _____ **Fault Category:** _____ **NCR:** Yes No **DQA:** _____ **Date:** _____

QA: N/C Closed: _____ **Date:** _____

NCR:		WORK ORDER NON-CONFORMANCE (NCR)						
DATE	STEP	Description of NC Section A	Corrective Action Section B			Verification Section C	Approval Chief Eng	Approval QC Inspector
			Initial Chief Eng	Action Description Chief Eng	Sign & Date			

NOTE: Date & initial all entries

Date: Thursday, 5/3/2007 11:24:53 AM
User: Kim Johnston

Process Sheet

Customer	: CU-DAR001 Dart Helicopters Services	Drawing Name	: X-TUBE AS 350/355 HI FWD ~~UNDER REWIEW~~
Job Number	: 32155A		
Estimate Number	: 12484		
P.O. Number	: N/A	Part Number	: D350748141
This Issue	: 5/3/2007 S.O. No. : N/A	Drawing Number	: D350-748-141 ~~U/R~~ OK
Prsht Rev.	: NC	Project Number	: N/A
First Issue	: N/A Type : LANDING GEAR	Drawing Revision	: ~~C~~ D
Previous Run	: 32154A	Material	: N/A
Written By	:	Due Date	: 6/10/2007 Qty: 1 Um: Each
Checked & Approved By	: 07.05.03		
Comment	: Est Rev: A New Issue 06-07-05 JLM		
	Est Rev: B Update cadplate process 06-09-12 KJ		

Additional Product

Job Number:

Seq. #:	Machine Or Operation:	Description :
1.0	DC	DOCUMENT CONTROL

Comment: DOCUMENT CONTROL
Photocopy bluefile and create labels as per PPP D350-748-141 CHG001 N/A

2.0	D6017115	Crosstube Material

Comment: Qty.: 1.0000 Each(s)/Unit Total : 1.0000 Each(s)
Crosstube Material
D6017-115
2.339" OD X 2.000" ID
Batch: 274171 BG 07.07.13

3.0	MORI SEIKI	MORI SEIKI CNC LATHE LARGE

Comment: MORI SEIKI CNC LATHE LARGE

1-Fill tube with sand & install plugs on both ends as per Folio FA648

2-Turn first side as per Folio FA648

3-Deburr & Inspect for surface damage. Repair damage within limits as per Dwg D350-748-141. 07/07/14

4.0	QC1	INSPECT ALL DIM TO DIM SHEET

Comment: INSPECT ALL DIM TO DIM SHEET 07/07/14

Dart Aerospace Ltd

W/O:		WORK ORDER CHANGES					
DATE	STEP	PROCEDURE CHANGE	By	Date	Qty	Approval Chief Eng / Prod Mgr	Approval QC Inspector

Part No: _____ **PAR #:** _____ **Fault Category:** _____ **NCR:** Yes No **DQA:** _____ **Date:** _____

QA: N/C Closed: _____ **Date:** _____

NCR:		WORK ORDER NON-CONFORMANCE (NCR)						
DATE	STEP	Description of NC Section A	Corrective Action Section B			Verification Section C	Approval Chief Eng	Approval QC Inspector
			Initial Chief Eng	Action Description Chief Eng	Sign & Date			

NOTE: Date & initial all entries

Date: Thursday, 5/3/2007 11:24:53 AM
User: Kim Johnston

Process Sheet

Customer: CU-DAR001 Dart Helicopters Services

Drawing Name: X-TUBE AS 350/355 HI FWD UNDER REWIEW

Job Number: 32155A

Part Number: D350748141

Job Number:

Seq. #:	Machine Or Operation:	Description :
5.0	MORI SEIKI	MORI SEIKI CNC LATHE LARGE

Comment: MORI SEIKI CNC LATHE LARGE

1-Turn second side as per Folio FA648

2-Deburr & Inspect for surface damage. Repair damage within limits as per Dwg D350-748-141.

3-Scribe Part & Batch as per Dwg D350-748-141

SF 07/07/14

6.0	QC1	INSPECT ALL DIM TO DIM SHEET

Comment: INSPECT ALL DIM TO DIM SHEET

S.F 07/07/14

7.0	QC8	SECOND CHECK

Comment: SECOND CHECK

SA 07.07.15

8.0	LANDING GEAR 1	LANDING GEAR RESOURCE 1

Comment: LANDING GEAR RESOURCE 1
Remove all Machining Marks

JB 7-7-26

9.0	OUTSIDE SERV.10	OUTSIDE SERVICES -LG

Comment: Sub-Contracting OUTSIDE SERVICES
Issue P/O: 4289
Heat Treat to min 180 KSI As per Dwg D350-748-141
(MIL-T-6736 OR AMS 2759-1C)
Sand Blast tube after Heat Treat
Possibe Supplier: Vac Aero
Ensure Certificate of Conformity is attached

JLL 7.8.02

10.0	PACKAGING 1	PACKAGING RESOURCE #1

Comment: PACKAGING RESOURCE #1
Receive & Inspect For Transit Damage
Ensure certificate of conformaty is attached

07/08/24

Form: rprocess

Dart Aerospace Ltd

W/O:		WORK ORDER CHANGES					
DATE	STEP	PROCEDURE CHANGE	By	Date	Qty	Approval Chief Eng / Prod Mgr	Approval QC Inspector

Part No: _____ **PAR #:** _____ **Fault Category:** _____ **NCR:** Yes No **DQA:** _____ **Date:** _____

QA: N/C Closed: _____ **Date:** _____

NCR:		WORK ORDER NON-CONFORMANCE (NCR)						
DATE	STEP	Description of NC Section A	Corrective Action Section B			Verification Section C	Approval Chief Eng	Approval QC Inspector
			Initial Chief Eng	Action Description Chief Eng	Sign & Date			

NOTE: Date & initial all entries

H:\fFORMS\Quality Assurance\approved QA\NCRWO RevD

Date: Thursday, 5/3/2007 11:24:53 AM
User: Kim Johnston

Process Sheet

Customer: CU-DAR001 Dart Helicopters Services
Drawing Name: X-TUBE AS 350/355 HI FWD UNDER REWIEW

Job Number: 32155A
Part Number: D350748141

Job Number:

Seq. #:	Machine Or Operation:	Description :
11.0	QC6	DIMENSIONAL CHECK

709-10 ①

Comment: DIMENSIONAL CHECK

12.0	BENDING	BENDING MACHINE

Comment: BENDING MACHINE
Bend tube as per Dwg D350-748-141 using CNC bender program D350F and Folio FT EL 7-9-11

13.0	QC15	DIMENSIONAL CHECK OF X-TUBES

709-11 ①

Comment: DIMENSIONAL CHECK OF X-TUBES

14.0	LANDING GEAR 1	LANDING GEAR RESOURCE 1

Comment: LANDING GEAR RESOURCE 1

1-Drill Tube as per Dwg D350-748-141 Using DT8876 Drill Jigs,
Set-up drill table as per QSI 010

2-Deburr

3-Engrave Part # and Batch # as per Dwg D350-748-141

EL 7-9-28

4-Remove all marks from tube within limits of D350-748-141 AWM 07-10-03

5- Apply a light coat of LPS3 on the interior of tube
Batch: M104161 EL 7-9-12

15.0	QC5	INSPECT WORK TO CURRENT STEP

Checked hole for alignment & ok 10/04

Comment: INSPECT WORK TO CURRENT STEP

16.0	OUTSIDE SERV.10	OUTSIDE SERVICES -LG

Comment: Sub-Contracting OUTSIDE SERVICES
Issue P/O: 4787 CL 07/10/11
Stress relief at 375° for 5 hours
Magnetic Particle Inspect per ASTM E1444 ①
Cadium Plate per AMS-QQ-P-416B, Class 1, Type 2
Embrittle relief at 375° for 8 hours, Chromate Treat
Possibe Supplier: Southwest United Industries
Ensure Certificate of Conformity is attached

Dart Aerospace Ltd

W/O:		WORK ORDER CHANGES					
DATE	STEP	PROCEDURE CHANGE	By	Date	Qty	Approval Chief Eng / Prod Mgr	Approval QC Inspector

Part No: _____ **PAR #:** _____ **Fault Category:** _____ **NCR:** Yes No **DQA:** _____ **Date:** _____

QA: N/C Closed: _____ **Date:** _____

NCR:		WORK ORDER NON-CONFORMANCE (NCR)						
DATE	STEP	Description of NC Section A	Corrective Action Section B			Verification Section C	Approval Chief Eng	Approval QC Inspector
			Initial Chief Eng	Action Description Chief Eng	Sign & Date			

NOTE: Date & initial all entries

Date: Thursday, 5/3/2007 11:24:53 AM
User: Kim Johnston

Process Sheet

Customer: CU-DAR001 Dart Helicopters Services **Drawing Name:** X-TUBE AS 350/355 HI FWD UNDER REWIEW

Job Number: 32155A **Part Number:** D350748141

Job Number:

Seq. #:	Machine Or Operation:	Description :
17.0	PACKAGING 1	PACKAGING RESOURCE #1

Comment: PACKAGING RESOURCE #1
Receive & Inspect For Transit Damage
Ensure certificate of conformity is attached 7/11/06 (1x) SP

18.0	QC5	INSPECT WORK TO CURRENT STEP

Comment: INSPECT WORK TO CURRENT STEP 07/11/07

19.0	SPRAY PAINTING	SPRAY PAINTING

Comment: SPRAY PAINTING

1-Prime inside crosstube as per QSI 005 4.2 ~~ml 07 11 07~~ (1)

2-Prime Outside of Tube as per Dart QSI 005 4.2 ml 07 11 14

20.0	QC14	INSPECT SPRAY PAINT

07-11-15 (1)

Comment: Inspect Spray Paint
Then,Wrap in plastic bag to protect from scratches

21.0	D35021	SUPPORT

Comment: Qty.: 2.0000 Each(s)/Unit Total : 2.0000 Each(s)
SUPPORT
Batch: 32205 ml 07 11 15

22.0	D2856400	Abrasion Strip

Comment: Qty.: 1.2401 f(s)/Unit Total : 1.2401 f(s)
Abrasion Strip 7.10" long x2
Batch: 34642 ml 07 11 15

23.0	ALS41032225	Insert

Comment: Qty.: 1.0000 Each(s)/Unit Total : 1.0000 Each(s)
Insert
Batch: 100621 ml 07 1115

Dart Aerospace Ltd

W/O:		WORK ORDER CHANGES					
DATE	STEP	PROCEDURE CHANGE	By	Date	Qty	Approval Chief Eng / Prod Mgr	Approval QC Inspector

Part No: _____ **PAR #:** _____ **Fault Category:** _____ **NCR:** Yes (No) **DQA:** [illegible] **Date:** 07/11/13

QA: N/C Closed: _____ **Date:** _____

NCR:		WORK ORDER NON-CONFORMANCE (NCR)						
DATE	STEP	Description of NC Section A	Corrective Action Section B			Verification Section C	Approval Chief Eng	Approval QC Inspector
			Initial Chief Eng	Action Description Chief Eng	Sign & Date			
07 11 13	19.0	Run in primer (Human Error)	[illegible] QS1/4/2	Sand with 320 and re-spray per QS1 005	[illegible] 07 11 14	[illegible] 07/11/13	[illegible] QS1/4/2	[illegible] 07/11/13

NOTE: Date & initial all entries

Date: Thursday, 5/3/2007 11:24:53 AM
User: Kim Johnston

Process Sheet

Customer: CU-DAR001 Dart Helicopters Services **Drawing Name:** X-TUBE AS 350/355 HI FWD UNDER REWIEW

Job Number: 32155A **Part Number:** D350748141

Job Number:

Seq. #:	Machine Or Operation:	Description :
24.0	AN960JD10	Washer

Comment: Qty.: 1.0000 Each(s)/Unit Total : 1.0000 Each(s)
Washer
Batch: 105442 ml 07 11 15

25.0	MS2192020	Clamp (per MIL-DTL-8783C)

Comment: Qty.: 2.0000 Each(s)/Unit Total : 2.0000 Each(s)
Clamp (per MIL-DTL-8783C)
Batch: 102787 ml 07 11 15

26.0	MS27039110	Screw

Comment: Qty.: 1.0000 Each(s)/Unit Total : 1.0000 Each(s)
Screw
Batch: 18836 ml 07 11 15

27.0	LANDING GEAR 1	LANDING GEAR RESOURCE 1

Comment: LANDING GEAR RESOURCE 1

1-Install Ground wire Insert,then insert screw and washer

2-Install Abraision strips as per Dwg D350-748-141 & QSI 035.

3-Install supports Using Dt8876 as per Dwg D350-748-141,Torque to 60-80 IN-LBS

ml 07 11 15

28.0	QC5	INSPECT WORK TO CURRENT STEP

07-11-15

Comment: INSPECT WORK TO CURRENT STEP

29.0	PACKAGING 1	PACKAGING RESOURCE #1

Comment: PACKAGING RESOURCE #1 32155
Identify and pack for shipping as per PPP D350-748-241
Location: B
PPP Rev: 7/11/20 SQ

Form: rprocess

Dart Aerospace Ltd

W/O:		WORK ORDER CHANGES					
DATE	STEP	PROCEDURE CHANGE	By	Date	Qty	Approval Chief Eng / Prod Mgr	Approval QC Inspector

Part No: _____ **PAR #:** _____ **Fault Category:** _____ **NCR:** Yes (No) **DQA:** D **Date:** 07/11/20

QA: N/C Closed: _____ **Date:** _____

NCR:		WORK ORDER NON-CONFORMANCE (NCR)						
DATE	STEP	Description of NC Section A	Corrective Action Section B			Verification Section C	Approval Chief Eng	Approval QC Inspector
			Initial Chief Eng	Action Description Chief Eng	Sign & Date			

NOTE: Date & initial all entries

Date: Thursday, 5/3/2007 11:24:53 AM
User: Kim Johnston

Process Sheet

Customer: CU-DAR001 Dart Helicopters Services

Drawing Name: X-TUBE AS 350/355 HI FWD UNDER REWIEW

Job Number: 32155A

Part Number: D350748141

Job Number:

Seq. #:	Machine Or Operation:	Description :
30.0	QC21	FINAL INSPECTION/W/O RELEASE

Comment: FINAL INSPECTION/W/O RELEASE

Job Completion

U 07.11.20

Form: rprocess

Dart Aerospace Ltd

W/O:		WORK ORDER CHANGES					
DATE	STEP	PROCEDURE CHANGE	By	Date	Qty	Approval Chief Eng / Prod Mgr	Approval QC Inspector

Part No: _____ PAR #: _____ Fault Category: _____ NCR: Yes No DQA: _____ Date: _____

QA: N/C Closed: _____ Date: _____

NCR:		WORK ORDER NON-CONFORMANCE (NCR)						
DATE	STEP	Description of NC Section A	Corrective Action Section B			Verification Section C	Approval Chief Eng	Approval QC Inspector
			Initial Chief Eng	Action Description Chief Eng	Sign & Date			

NOTE: Date & initial all entries

DART AEROSPACE LTD	Work Order:	32155A
Description: Crosstube High Fwd (AS350/355)	**Part Number:**	**D350-748-101**
Inspection Dwg: D350-748-141 **Rev:** D		**Page 1 of 1**

Required Dimension	Min	Max
Height	23.13	23.37
1/2 Span	40.78	41.02
Angle	75	77
Total Span	81.56	82.04

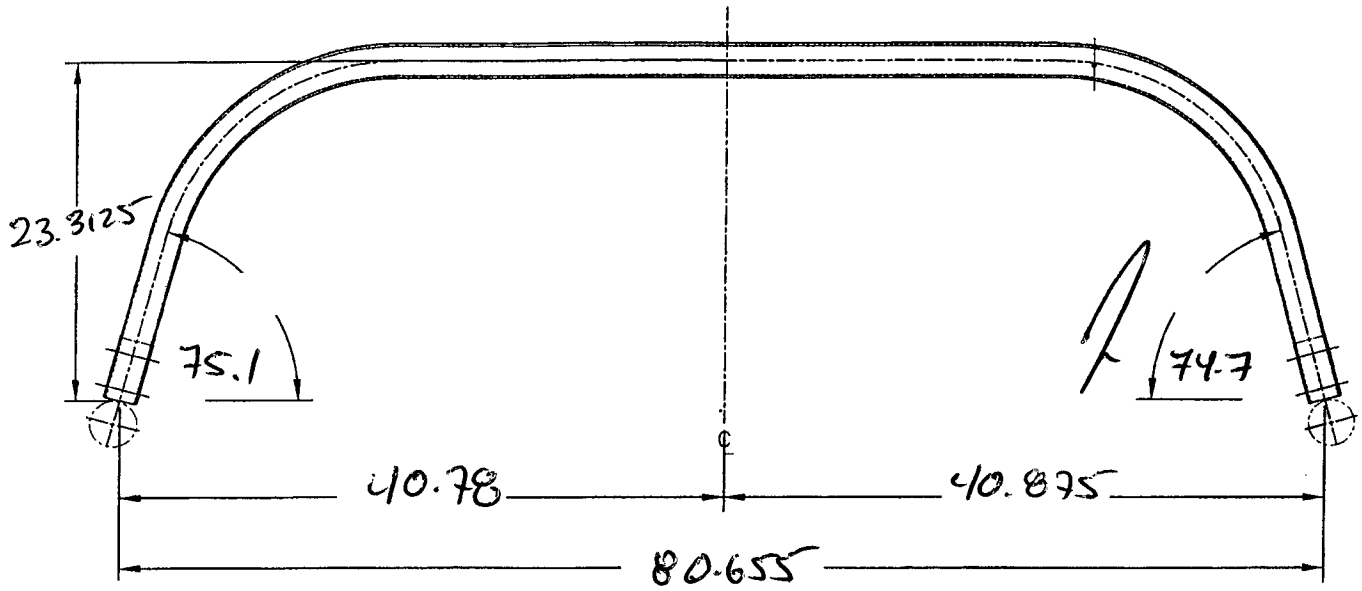

Comments

QC15 Inspection	
Date	09.09.11

Rev	Date	Change	Revised by	Approved
A	07.02.06	New Issue	KJ/JM	

DART AEROSPACE LTD	Work Order:	32155A
Description: Crosstube Assembly (AS350/355 High Fwd)	Part Number:	D350-748-141
Inspection Dwg: D350-748-141 **Rev:** D		Page 1 of 1

FIRST ARTICLE INSPECTION CHECKLIST

[X] First Article [ ] Prototype

	Inspection Sheet Drawing Dimension	Tolerance	Actual Dimension	Accept	Reject	Method of Inspection	Comments
SIDE A	2.240	+0.005/-0.000	2.242				
	2.180	+0.005/-0.000	2.182				
	2.180	+0.005/-0.000	2.182				
	2.237	+0.005/-0.000	2.239				
	2.272	+0.005/-0.000	2.274				
	2.306	+0.005/-0.000	2.308				
	2.339	+0.005/-0.000	2.341				
	2.339	+0.005/-0.000	2.341				
	0.062	+/-0.010	.062				
	4.26	+/-0.030	4.260				
	R0.063	+/-0.010	.063				
	R0.50	+/-0.030	.500				
SIDE B	2.240	+0.005/-0.000	2.242				
	2.180	+0.005/-0.000	2.182				
	2.180	+0.005/-0.000	2.182				
	2.237	+0.005/-0.000	2.239				
	2.272	+0.005/-0.000	2.274				
	2.306	+0.005/-0.000	2.308				
	2.339	+0.005/-0.000	2.341				
	2.339	+0.005/-0.000	2.341				
	0.062	+/-0.010	.062				
	4.26	+/-0.030	4.26				
	R0.063	+/-0.010	.063				
	R0.50	+/-0.030	.500				
	110.27	+/-0.060					

Measured by:		Audited by:		Prototype Approval:	N/A
Date:	07/07/14	Date:	07.07.14	Date:	N/A

Rev	Date	Change		Revised by	Approved
A	06.11.09	New Issue	(P/O D350-748-101)	KJ/JLM	

DESIGN	DRAWN BY	DART AEROSPACE LTD HAWKESBURY, ONTARIO, CANADA
CHECKED	APPROVED	DRAWING NO. D350-748-141 REV. D SHEET 1 OF 3
DATE 06.10.31		TITLE CROSSTUBE (AS 350/355 HI FWD) SCALE NTS

A	06.03.31	NEW ISSUE
B	06.06.30	ADD D6017-115 & PRIME AND PAINT
C	06.08.14	ADD CAD PLATING
D	06.10.31	MAG. PARTICLE AND CAD PLATE AS MFD.

RELEASED
06.10.31

QTY	P/N	DESCRIPTION
X	D350-748-141	CROSSTUBE ASSEMBLY (AS 350/355 HI FWD)
1	D6017-115	CROSSTUBE (OR D6015-125)
2	D3502-1	SUPPORT
2	D2856-400-710	ABRASION STRIP
1	AELS-1032-225	INSERT
1	AN960JD10	WASHER
2	MS21920-20	CLAMP (PER DART SPEC. M-MS21920-20)
1	MS27039-1-10	SCREW

D350-748-141 CROSSTUBE:

1) MATERIAL: MANUFACTURED FROM D6017-115 OR D6015-125
   FINISHED LENGTH = 110.27±0.06
2) MACHINE PER MACHINING DETAIL ON PAGE 3. BLEND OUT ALL EDGES FROM MACHINING LONGITUDINALY, TRANSITIONS SHOULD BE SMOOTH. NOTE: ALL HOLES ARE DRILLED AFTER BENDING.
3) SCRIBE DART PART NUMBER AND BATCH NUMBER IN THIS AREA WITH VIBRATING STYLUS.
4) BEND PROGRESSIVELY WITH A MINIMUM OF 7 PASSES. MAXIMUM TUBE FLATTENING DUE TO BENDING IS 6% BASED ON O.D.
5) HEAT TREAT TO MIN. 180 KSI PER MIL-T-6736 OR AMS 2759-1C AFTER TURNING.
6) FINISH: MAGNETIC PARTICLE INSPECT PER DART QSI 038 4.2
   CADMIUM PLATE PER AMS-QQ-P-416B, CLASS 1, TYPE II
   PRIME INSIDE AND OUTSIDE PER DART QSI 005 4.2
   PAINT OUTSIDE PER DART QSI 005 4.2
7) EXTREME CARE MUST BE TAKEN TO PROTECT THE OUTSIDE SURFACE OF THE TUBE. THE OUTSIDE SURFACE MUST BE SMOOTH AND FREE FROM SURFACE DEFECTS SUCH AS SCRATCHES, NICKS, OR DENTS. DEFECTS UP TO 0.005" MAY BE BLENDED OUT LONGITUDINALLY. CIRCUMFERENTIAL GRIND MARKS ARE UNACCEPTABLE. WHEN DRILLING HOLES EXTREME CARE MUST BE TAKEN AND CAREFUL DEBURRING PERFORMED TO ENSURE A CLEAN HOLE WITH NO CRACKING/CHIPPING/GROOVES.
8) INSTALL D2856-400-710 ABRASION STRIP WITH A GAP ON BOTTOM SIDE OF CROSSTUBE, CENTERED OPPOSITE D3502-1 SUPPORT, PER QSI 035.
9) TORQUE MS21920-20 CLAMPS 60 TO 80 IN-LB
10) TOLERANCES ARE PER DART QSI 018 UNLESS OTHERWISE NOTED.
11) ALL DIMENSIONS ARE IN INCHES
12) PART IS SYMMETRIC ABOUT CENTERLINE EXCEPT FOR Ø0.297 HOLE.

SHOP COPY
RETURN TO ENGINEERING
UNCONTROLLED COPY
SUBJECT TO AMENDMENT WITHOUT NOTICE
WORK ORDER NO. 32155A

UNDER REVIEW
07.02.16
COEF BEING REDUCED
OK 07.03.07

Copyright © 2006 by DART AEROSPACE LTD
THIS DOCUMENT IS PRIVATE AND CONFIDENTIAL AND IS SUPPLIED ON THE EXPRESS CONDITION THAT IT IS NOT TO BE USED FOR ANY PURPOSE OR COPIED OR COMMUNICATED TO ANY OTHER PERSON WITHOUT WRITTEN PERMISSION FROM DART AEROSPACE LTD.

AM 4-6A
4-41a
5-32a

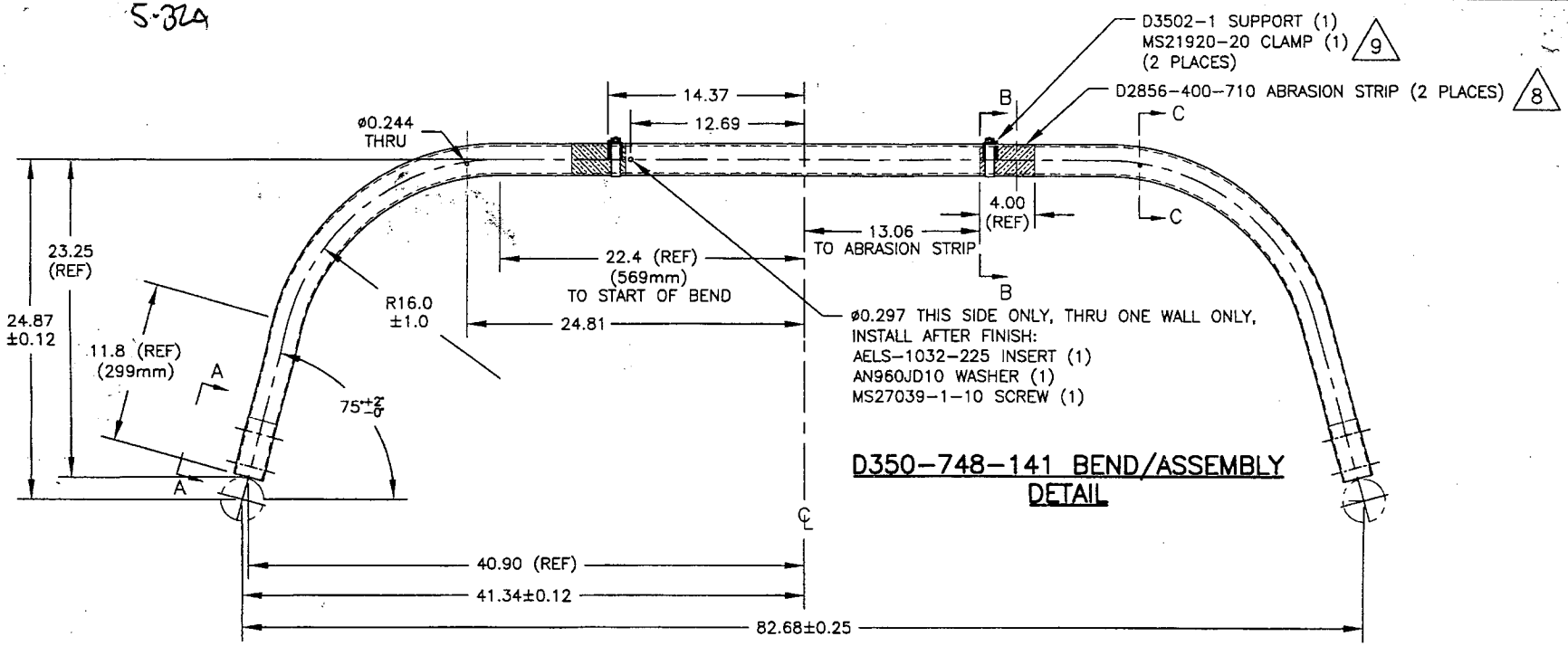

D350-748-141 BEND/ASSEMBLY DETAIL

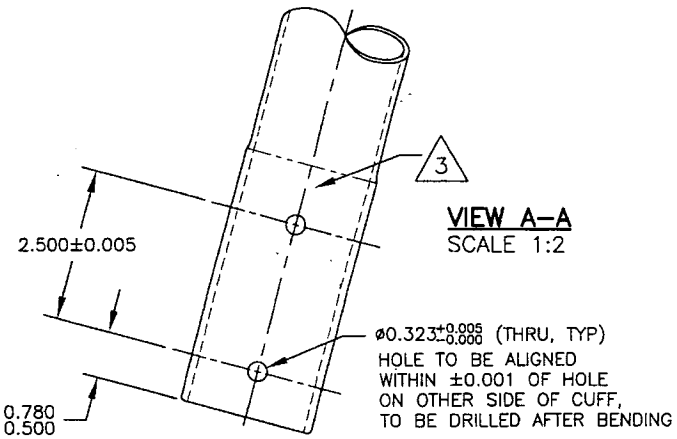

VIEW A-A
SCALE 1:2

SECTION B-B
SCALE 1:2

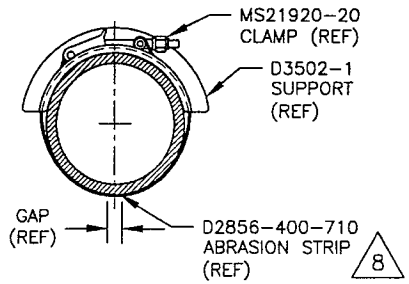

SECTION C-C
SCALE 1:2

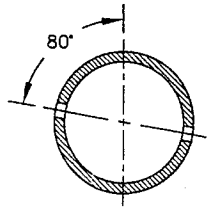

OK 07.03.07

UNDER REVIEW
07.02.16

RELEASED
06.10.31

COPYRIGHT © 2006 BY DART AEROSPACE LTD.

THIS DOCUMENT IS PRIVATE AND CONFIDENTIAL AND IS SUPPLIED ON THE EXPRESS CONDITION THAT IT IS NOT TO BE USED FOR ANY PURPOSE OR COPIED OR COMMUNICATED TO ANY OTHER PERSON WITHOUT WRITTEN PERMISSION FROM DART AEROSPACE LTD.

DESIGN: GP	DRAWN BY: GP	DART	DART AEROSPACE LTD. HAWKESBURY, ONTARIO, CANADA
CHECKED:	APPROVED:	DRAWING NO. D350-748-141	REV. D SHEET 2 OF 3
DATE: 06.10.31		TITLE: CROSSTUBE (AS 350/355 HI FWD)	SCALE: 1:8

SHOP COPY
RETURN TO
ENGINEERING
UNCONTROLLED COPY
SUBJECT TO AMENDMENT
WITHOUT NOTICE
WORK ORDER
NO. 32554

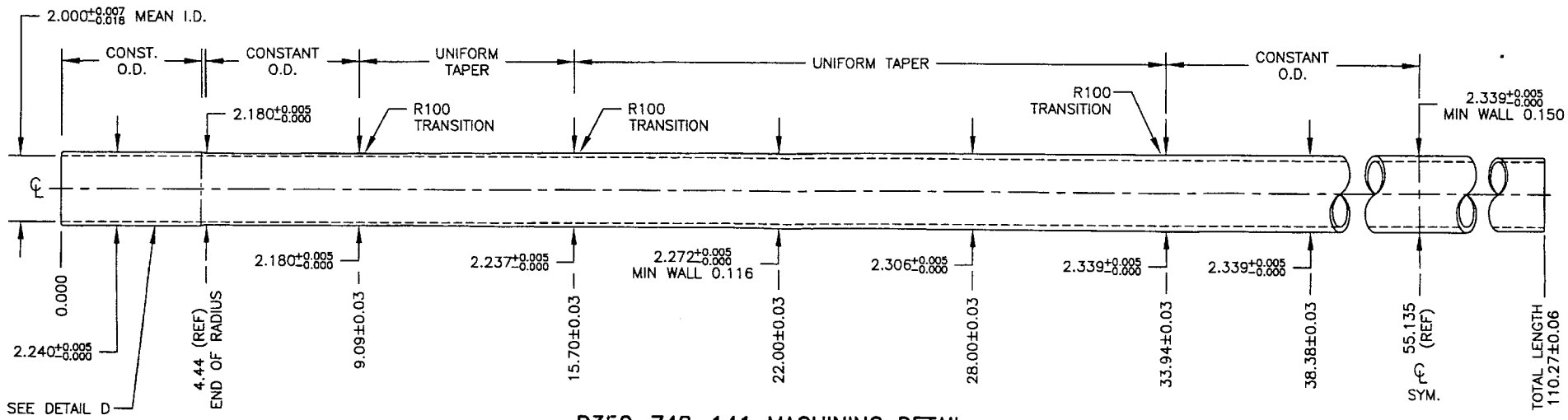

D350-748-141 MACHINING DETAIL

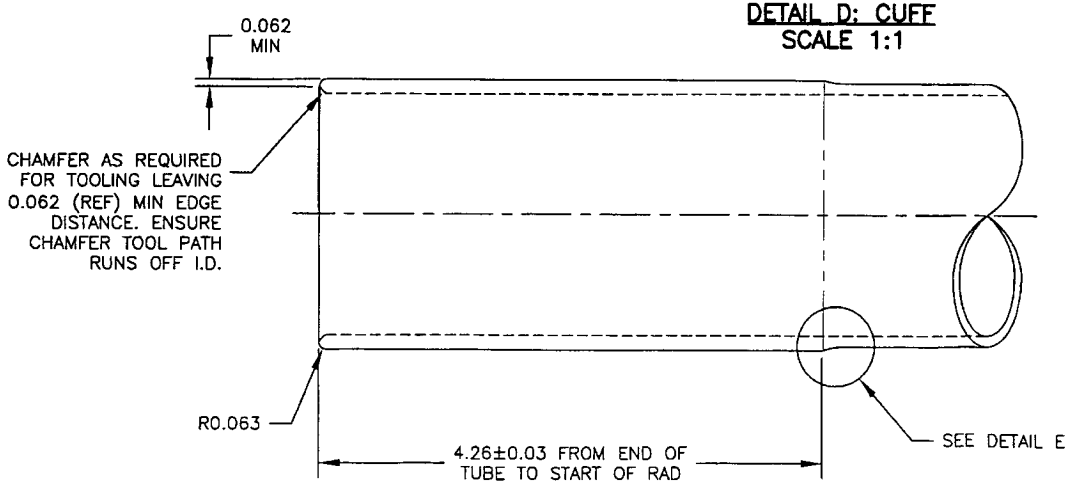

DETAIL D: CUFF
SCALE 1:1

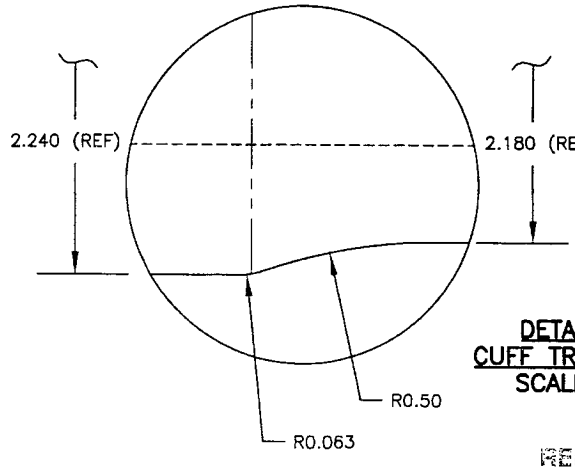

DETAIL E: CUFF TRANSITION
SCALE 9:1

OK 06.10.31

UNDER REVIEW
07.06.16

RELEASED
06.10.31

SHOP COPY
RETURN TO ENGINEERING
UNCONTROLLED COPY
SUBJECT TO AMENDMENT WITHOUT NOTICE
WORK ORDER NO. 3215A

COPYRIGHT © 2006 BY DART AEROSPACE LTD.

THIS DOCUMENT IS PRIVATE AND CONFIDENTIAL AND IS SUPPLIED ON THE EXPRESS CONDITION THAT IT IS NOT TO BE USED FOR ANY PURPOSE OR COPIED OR COMMUNICATED TO ANY OTHER PERSON WITHOUT WRITTEN PERMISSION FROM DART AEROSPACE LTD.

DESIGN	DRAWN BY	DART	DART AEROSPACE LTD. HAWKESBURY, ONTARIO, CANADA
CHECKED	APPROVED	DRAWING NO. D350-748-141	REV. D SHEET 3 OF 3
DATE 06.10.31		TITLE CROSSTUBE (AS 350/355 HI FWD)	SCALE 1:3

VAC AERO INTERNATIONAL INC.

PACKING SLIP

OAK 89868-1

[X] HEAD OFFICE
1371 SPEERS ROAD, OAKVILLE, ONTARIO
CANADA L6L 2X5
TEL: (905) 827-4171 FAX: (905) 827-7489

[ ] QUEBEC DIVISION
7450 RUE VÉRITÉ STREET, ST. LAURENT, QUÉBEC
CANADA H4S 1C5
TEL: (514) 334-4240 FAX: (514) 334-6269

GST No. : R105468102

08/22/2007
MM / DD / YYYY

PAGE : 1

BILL TO: 1DAR01
DART AEROSPACE LTD.
1270 ABERDEEN ST.
HAWKESBURY, ON

K6A 1K7

SHIP TO : DART AEROSPACE LTD.
1270 ABERDEEN ST.
HAWKESBURY, ON

K6A 1K7

DATE SHIPPED	SHIP VIA	F.O.B.
08/22/2007		ORIGIN
CUSTOMER P/O No.	**JOB No.**	**TERMS**
00004289		COD

LN	PART NO	DESCRIPTION	UOM	QTY ORDERED	QTY SHIPPED	B/O QTY
01	D350-718	-141/241	EA	10	10	0
	Process Specifications:	Procedure: 4353				
	HEAT TREATED TO 180 KSI PER AMS 2759-1C					
	100% HARDNESS CHECKED AS PER ASTM E-18					
	HRC 40-45					
	MATERIAL : 4130					
	SAND BLASTED					
	1 PIECE P/N D350748141 B32157, 1 PIECE P/N D350748241 B32161					
	1 PIECE P/N D350748141 B32153, 1 PIECE P/N D350748241 B32160					
	1 PIECE P/N D350748141 B32155, 1 PIECE P/N D350748241 B32159					
	1 PIECE P/N D350748141 B32154, 1 PIECE P/N D350748241 B32162					
	1 PIECE P/N D350748141 B32156, 1 PIECE P/N D350748241 B32158					
02	MC	MINIMUM CHARGE 375 LBS @ $2.26/LB		1	1	0
03	GB	GRIT BLASTING		1	1	0

No claims for shortage in weight or count will be entertained, unless presented within 5 working days after receipt of materials by customer.

METAL TREATING INSTITUTE

VACUUM BRAZING · HEAT TREATING · SPECIAL PROCESSING · FURNACE EQUIPMENT
TURBINE COMPONENT OVERHAUL · PLASMA AND OTHER COATINGS

Nadcap PRI PERFORMANCE REVIEW INSTITUTE Accredited
HEAT TREATING

VAC AERO INTERNATIONAL INC.

RELEASE NOT

GST No. : R105468102

OAK 89868-1

[X] HEAD OFFICE
1371 SPEERS ROAD, OAKVILLE, ONTARIO
CANADA L6L 2X5
TEL: (905) 827-4171 FAX: (905) 827-7489

[ ] 2009 WYECROFT ROAD, UNIT B
OAKVILLE, ONTARIO
CANADA L6I 6J4
TEL: (905) 827-7377 FAX: (905) 827-1380

[ ] QUEBEC DIVISION
7450 RUE VÉRITÉ STREET, ST. LAURENT, QUÉBEC
CANADA H4S 1C5
TEL: (514) 334-4240 FAX: (514) 334-6269

08/22/2007
MM / DD / YYYY

PAGE : 1

BILL TO: 1DAR01
DART AEROSPACE LTD.
1270 ABERDEEN ST.
HAWKESBURY, ON

K6A 1K7

SHIP TO : DART AEROSPACE LTD.
1270 ABERDEEN ST.
HAWKESBURY, ON

K6A 1K7

DATE SHIPPED	SHIP VIA	F.O.B.
08/22/2007		ORIGIN
CUSTOMER P/O No.	**JOB No.**	**TERMS**
00004289		COD

PART No.	DESCRIPTION	UOM	QTY ORD	QTY SHPD	TEST RESULTS
D350-748	-141/241	EA	10	10	

Process Specifications: Procedure: 4353
HEAT TREATED TO 180 KSI PER AMS 2759-1C
100% HARDNESS CHECKED AS PER ASTM E-18
HRC 40-45
MATERIAL: 4130

SAND BLASTED

1 PIECE P/N D350748141 B32157, 1 PIECE P/N D350748241 B32161
1 PIECE P/N D350748141 B32153, 1 PIECE P/N D350748241 B32160
1 PIECE P/N D350748141 B32155, 1 PIECE P/N D350748241 B32159
1 PIECE P/N D350748141 B32154, 1 PIECE P/N D350748241 B32162
1 PIECE P/N D350748141 B32156, 1 PIECE P/N D350748241 B32158

100% HARDNESS TESTED
10 pcs.
42/43 HRC

V.A.I.O. TH. 25 Q.C.

I hereby certify that the material covered by this release note has been inspected and tested and conforms to all specifications relevant thereto in accordance with the conditions of the contract / or purchase order.

ON BEHALF OF VAC AERO INTERNATIONAL INC.

V.A.I.O. TH. 25 Q.C.

Laura Robinson
Authorized Q.C. Inspector

METAL TREATING INSTITUTE

VACUUM BRAZING - HEAT TREATING - SPECIAL PROCESSING - FURNACE EQUIPMENT
TURBINE COMPONENT OVERHAUL - PLASMA AND OTHER COATINGS

Nadcap pri PERFORMANCE REVIEW INSTITUTE Accredited
HEAT TREATING

CERTIFICATE OF
CONFORMANCE

CADORATH PLATING CO. LTD.
2150 LOGAN AVENUE
WINNIPEG, MANITOBA R2J-0J1

DATE: Oct-31-2007

CONSIGNED TO: Dart Aerospace Ltd.
1270 Aberdeen St.
Hawksbury, ON K6A 1K7

W/O #: 70675
INVOICE #: 36541

CONTRACT OR
PURCHASE ORDER # PO4787

DESCRIPTION: SKID QTY 4

P/N # D350748141 S/N # B3215

CADMIUM PLATE IAW AMS-QQ-P-416 REV. B TYPE 2 CLASS 1. MPI IAW ASTM-E-1444. BAKE HEAT CHART #8407 & #8431.

CERTIFCATE: I certify that the items indicated here on have been inspected and tested and conform to all specifications and requirements detailed on the contract or purchase order.

Approved Inspector: William Marunczak

CP 24

VAC AERO INTERNATIONAL INC.

PACKING SLIP

OAK 89868-1

☒ HEAD OFFICE
1371 SPEERS ROAD, OAKVILLE, ONTARIO
CANADA L6L 2X5
TEL: (905) 827-4171 FAX: (905) 827-7489

☐ QUEBEC DIVISION
7450 RUE VÉRITÉ STREET, ST. LAURENT, QUÉBEC
CANADA H4S 1C5
TEL: (514) 334-4240 FAX: (514) 334-6269

GST No. : R105468102

08/22/2007
MM / DD / YYYY

PAGE : 1

BILL TO: 1DAR01
DART AEROSPACE LTD.
1270 ABERDEEN ST.
HAWKESBURY, ON

K6A 1K7

SHIP TO : DART AEROSPACE LTD.
1270 ABERDEEN ST.
HAWKESBURY, ON

K6A 1K7

DATE SHIPPED	SHIP VIA	F.O.B.
08/22/2007		ORIGIN
CUSTOMER P/O No.	JOB No.	TERMS
00004289		COD

LN	PART NO	DESCRIPTION	UOM	QTY ORDERED	QTY SHIPPED	B/O QTY
01	D350-718	-141/241	EA	10	10	0
	Process Specifications:	Procedure: 4353				
	HEAT TREATED TO 180 KSI PER AMS 2759-1C					
	100% HARDNESS CHECKED AS PER ASTM E-18					
	HRC 40-45					
	MATERIAL : 4130					
	SAND BLASTED					
	1 PIECE P/N D350748141 B32157, 1 PIECE P/N D350748241 B32161					
	1 PIECE P/N D350748141 B32153, 1 PIECE P/N D350748241 B32160					
	1 PIECE P/N D350748141 B32155, 1 PIECE P/N D350748241 B32159					
	1 PIECE P/N D350748141 B32154, 1 PIECE P/N D350748241 B32162					
	1 PIECE P/N D350748141 B32156, 1 PIECE P/N D350748241 B32158					
02	MC	MINIMUM CHARGE 375 LBS @ $2.26/LB		1	1	0
03	GB	GRIT BLASTING		1	1	0

No claims for shortage in weight or count will be entertained, unless presented within 5 working days after receipt of materials by customer.

MTI METAL TREATING INSTITUTE

VACUUM BRAZING · HEAT TREATING · SPECIAL PROCESSING · FURNACE EQUIPMENT
TURBINE COMPONENT OVERHAUL · PLASMA AND OTHER COATINGS

Nadcap pri PERFORMANCE REVIEW INSTITUTE Accredited
HEAT TREATING

VAC AERO INTERNATIONAL INC.

RELEASE NOT

GST No. : R105468102

OAK 89868-1

[X] HEAD OFFICE
1371 SPEERS ROAD, OAKVILLE, ONTARIO
CANADA L6L 2X5
TEL: (905) 827-4171 FAX: (905) 827-7489

[ ] 2009 WYECROFT ROAD, UNIT B
OAKVILLE, ONTARIO
CANADA L6I 6J4
TEL: (905) 827-7377 FAX: (905) 827-1380

[ ] QUEBEC DIVISION
7450 RUE VÉRITÉ STREET, ST. LAURENT, QUÉBEC
CANADA H4S 1C5
TEL: (514) 334-4240 FAX: (514) 334-6269

08/22/2007
MM / DD / YYYY

PAGE : 1

BILL TO: 1DAR01
DART AEROSPACE LTD.
1270 ABERDEEN ST.
HAWKESBURY, ON

K6A 1K7

SHIP TO : DART AEROSPACE LTD.
1270 ABERDEEN ST.
HAWKESBURY, ON

K6A 1K7

DATE SHIPPED	SHIP VIA	F.O.B.
08/22/2007		ORIGIN
CUSTOMER P/O No.	**JOB No.**	**TERMS**
00004289		COD

PART No.	DESCRIPTION	UOM	QTY ORD	QTY SHPD	TEST RESULTS
D350-748	-141/241	EA	10	10	

Process Specifications: Procedure: 4353
HEAT TREATED TO 180 KSI PER AMS 2759-1C
100% HARDNESS CHECKED AS PER ASTM E-18
HRC 40-45
MATERIAL: 4130

SAND BLASTED

1 PIECE P/N D350748141 B32157, 1 PIECE P/N D350748241 B32161
1 PIECE P/N D350748141 B32153, 1 PIECE P/N D350748241 B32160
1 PIECE P/N D350748141 B32155, 1 PIECE P/N D350748241 B32159
1 PIECE P/N D350748141 B32154, 1 PIECE P/N D350748241 B32162
1 PIECE P/N D350748141 B32156, 1 PIECE P/N D350748241 B32158

100% HARDNESS TESTED
10 pcs.
42/43 HRC

AR V.A.I.O. TH. 25 Q.C.

I hereby certify that the material covered by this release note has been inspected and tested and conforms to all specifications relevant thereto in accordance with the conditions of the contract / or purchase order.

ON BEHALF OF VAC AERO INTERNATIONAL INC.

Laura Robinson
Authorized Q.C. Inspector

V.A.I.O. TH. 25 Q.C.

METAL TREATING INSTITUTE

VACUUM BRAZING - HEAT TREATING - SPECIAL PROCESSING - FURNACE EQUIPMENT
TURBINE COMPONENT OVERHAUL - PLASMA AND OTHER COATINGS

Nadcap PERFORMANCE REVIEW INSTITUTE Accredited
HEAT